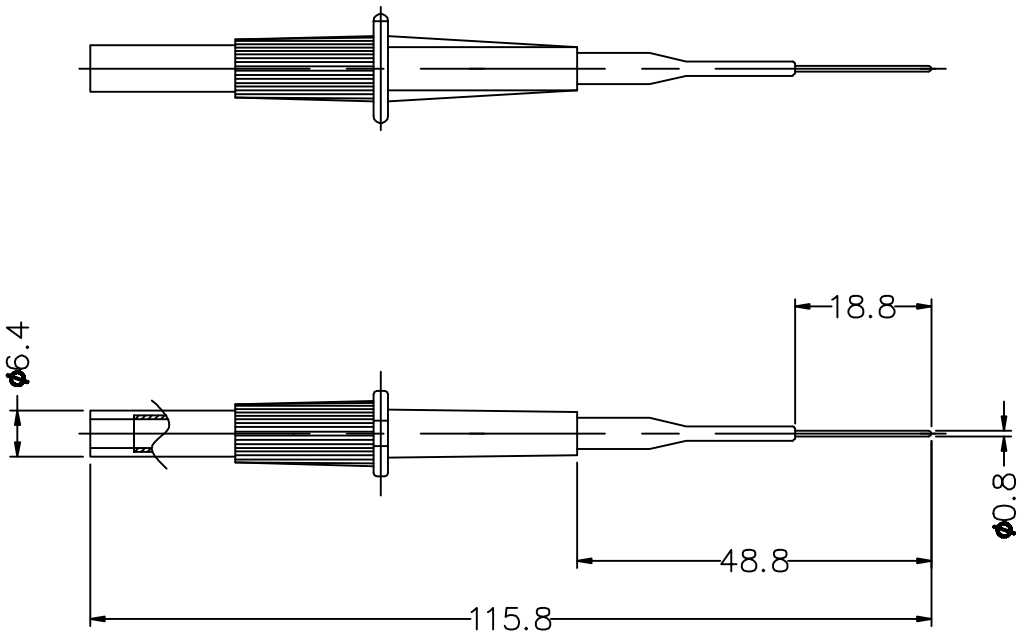

Back Probe To Replace

3rd ANGLE PROJECTION	UNIT	mm	TOLERANCE	±0.1	SCALE	1/1	MATERIAL ----
					NAME	TPI A057	
					DATE:	02/11/08	
2007.04.23.	. . .		. . .		DWG No.		